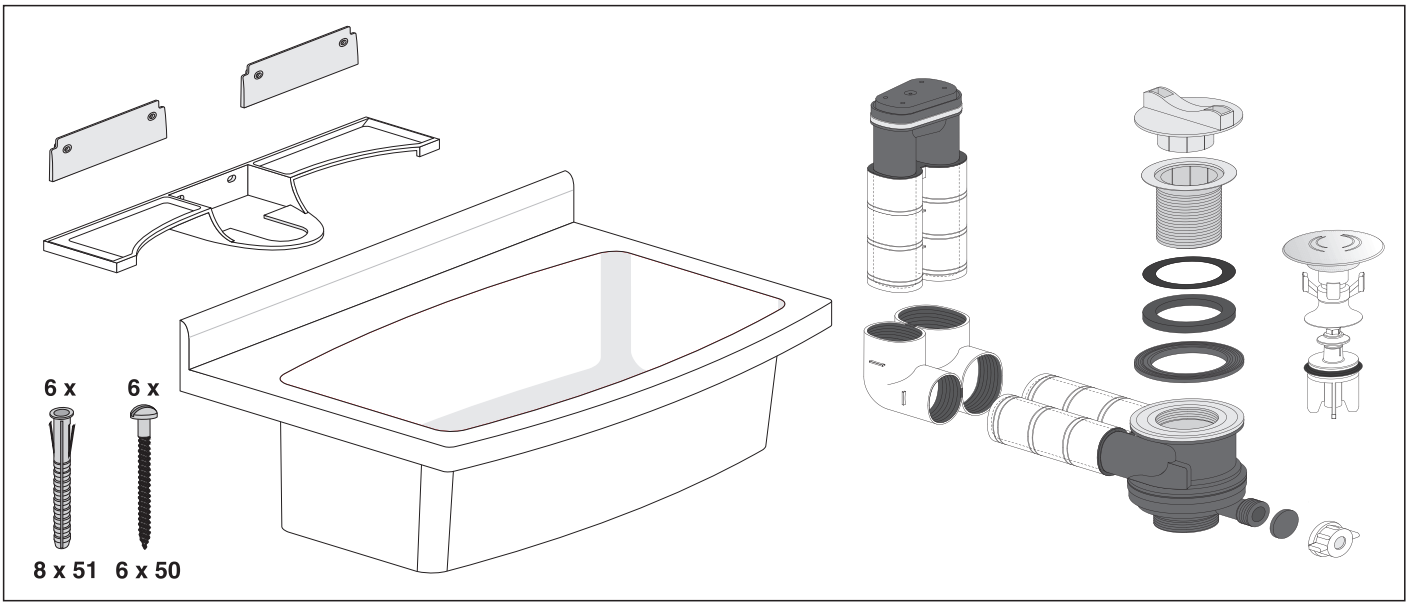

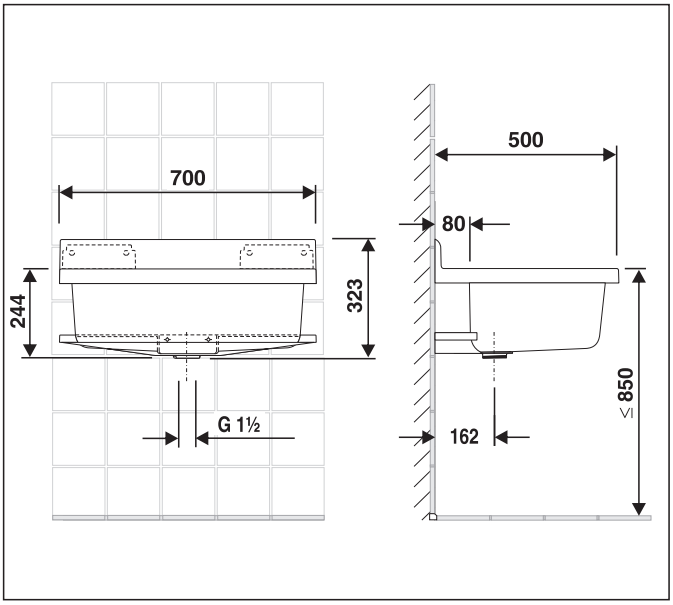

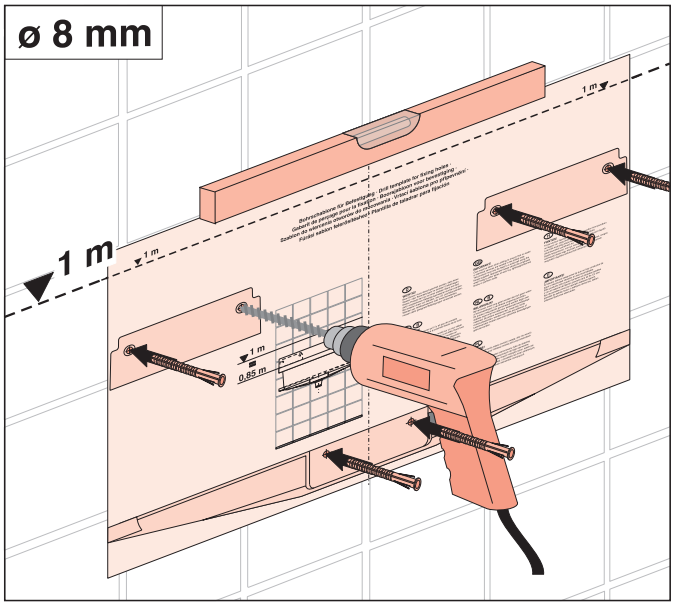

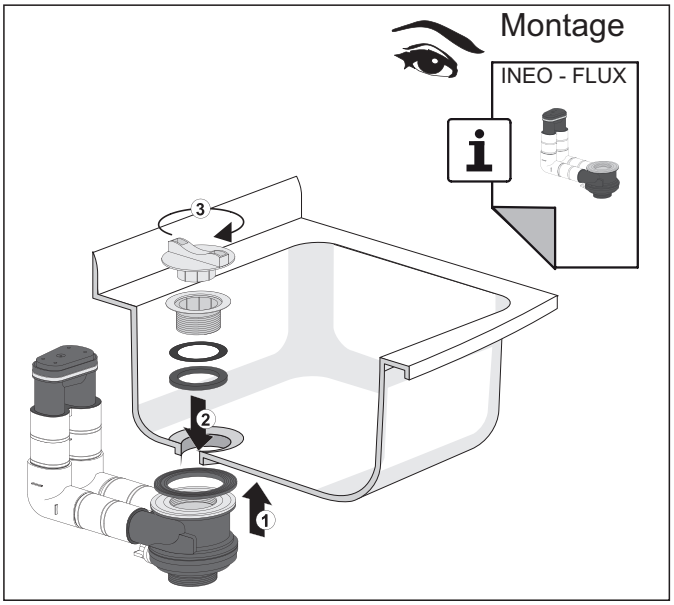

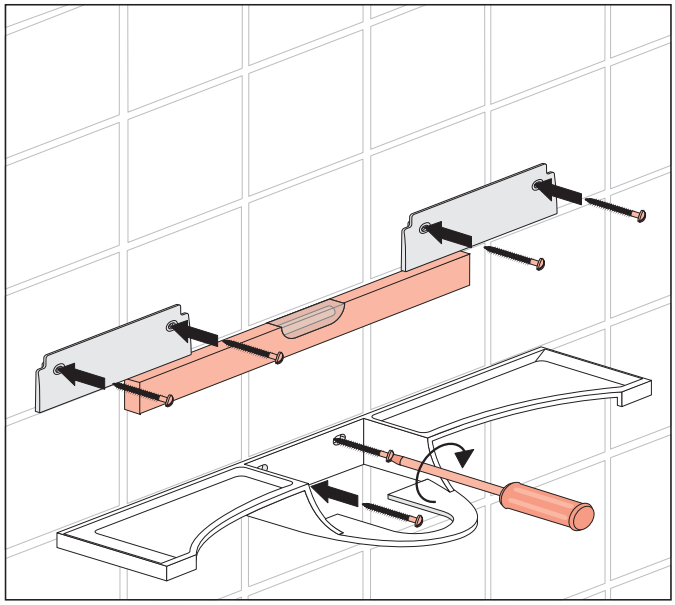

PM.310.33..0000

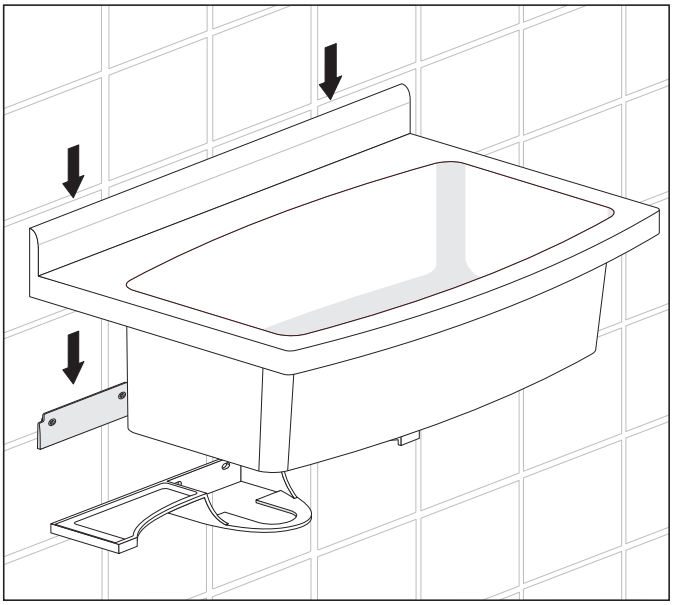

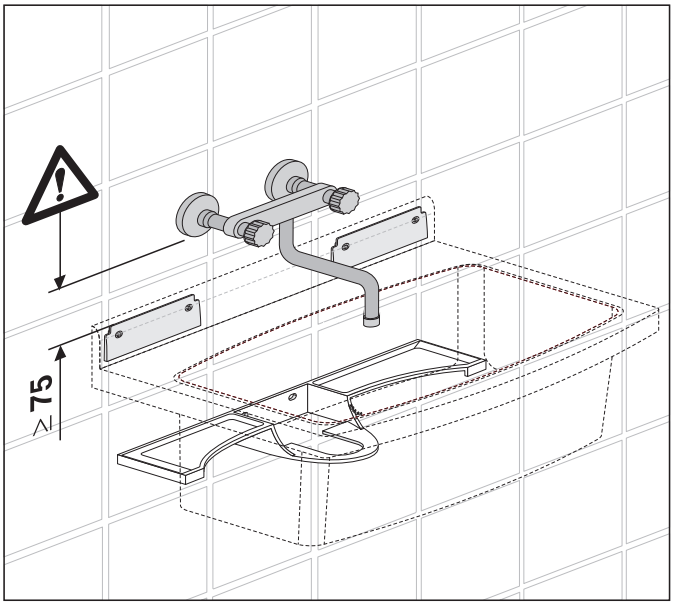
≥ 75

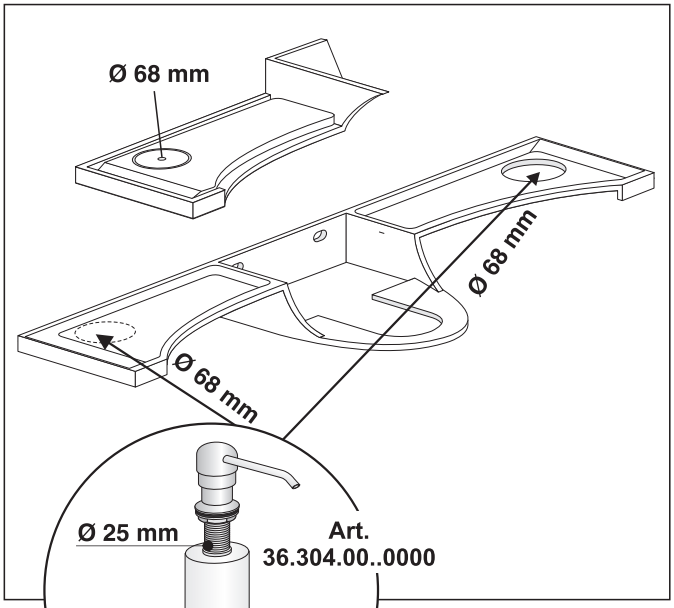
Ø 68 mm
Ø 68 mm
Ø 68 mm

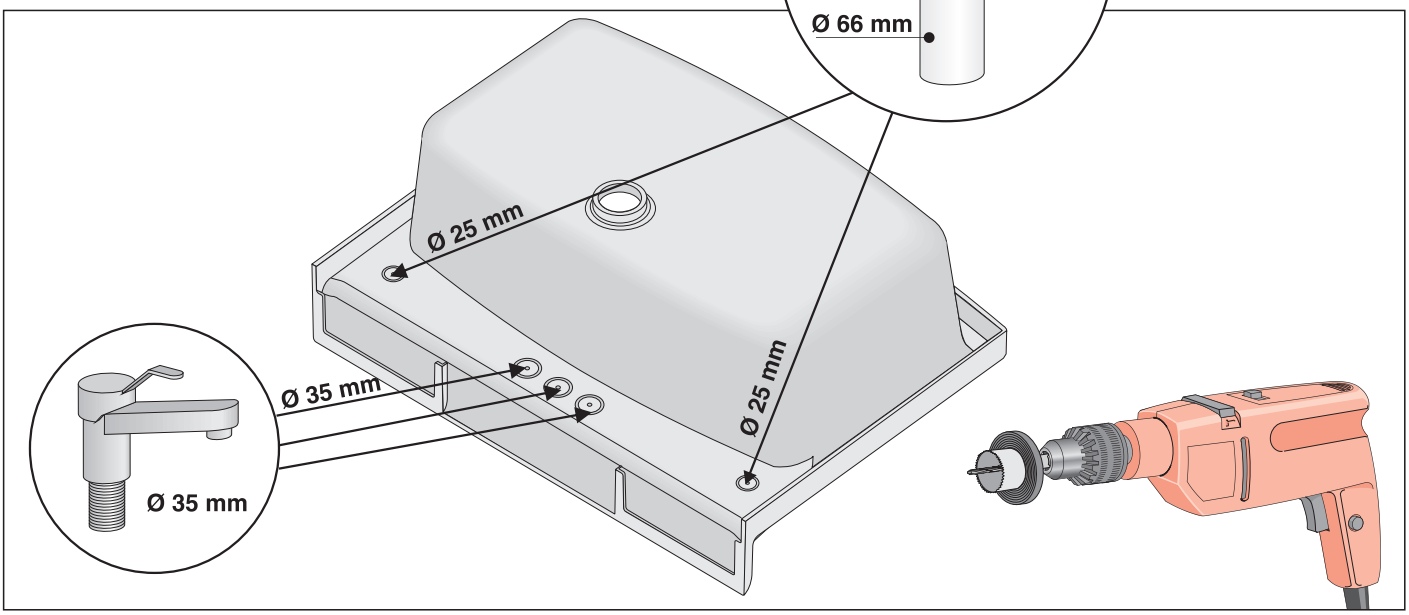
Ø 25 mm
Art.
36.304.00..0000
Ø 66 mm
Ø 25 mm
Ø 35 mm
Ø 25 mm
Ø 35 mm